FABCO TRANSFER CASE
Brought to you by:
Pro Gear AND TRANSMISSION
FabcoTransferCaseParts.com | 877.776.4600 | 407.872.1901 | parts@eprogear.com

Fabco AUTOMOTIVE CORPORATION

FABCO TC-270
TRANSFER CASE PARTS
MANUAL

Fabco Automotive Corporation, Livermore, CA

FabcoTransferCaseParts.com by Pro Gear and Transmission • 906 W. Gore St. Orlando, FL 32805 • 1 (877) 776-4600 / (407) 872-1901

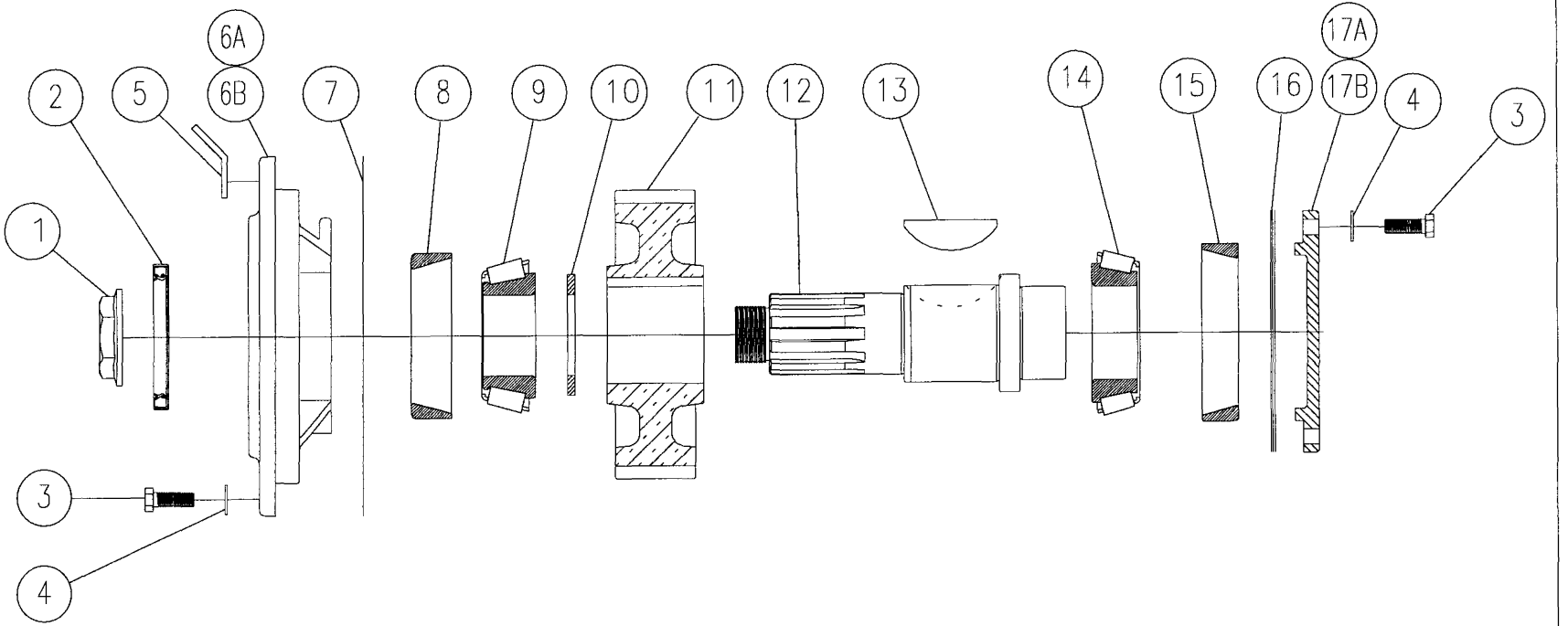

TC-270 UPPER SHAFT ASSEMBLY WITHOUT PTO PROVISIONS

FabcoTransferCaseParts.com by Pro Gear and Transmission • 906 W. Gore St. Orlando, FL 32805 • 1 (877) 776-4600 / (407) 872-1901

TC-270 UPPER SHAFT ASSEMBLY
Models without PTO Provisions

ITEM	PART NO.	DESCRIPTION	QTY.	FOOT NOTE
1	688 738	Nut, 1 3/4-12, Lock	1	
2	732 355	Seal	1	
3	265 238	Bolt, 7/16-14 x 1 1/4 Hex Head	16	
4	927 347	Washer, 7/16 Flat	16	
5	273 687	Bracket, Lifting	2	
6A	237 542 001	Carrier, Front with Lubrication Port	1	
6B	237 542 003	Carrier, Front without Lubrication Port	1	
7	427 523	Gasket	1	
8	233 492	Bearing Cup	1	
9	233 493	Bearing Cone	1	
10	927 797	Washer, Input Shaft Spacer	1	
11	432 628	Gear, Input Shaft	1	
12	776 229	Shaft, Input without PTO Provision	1	
13	966 326	Key	1	
14	233 489	Bearing Cone	1	
15	233 375	Bearing Cup	1	
16	744 278	Shim, .030 Thick, Coral	A/R	1
	744 279	Shim, .015 Thick, Pink	A/R	1
	744 282	Shim, .005 Thick, Blue	A/R	1
	744 283	Shim, .002 Thick, Red	A/R	1
17A	235 568 001	Cap, Top Rear without Lubrication Port	1	
17B	235 568 002	Cap, Top Rear with Lubrication Port	1	

Footnotes:

1. See section 6.2 of service manual for adjustment procedures.

FabcoTransferCaseParts.com by Pro Gear and Transmission • 906 W. Gore St. Orlando, FL 32805 • 1 (877) 776-4600 / (407) 872-1901

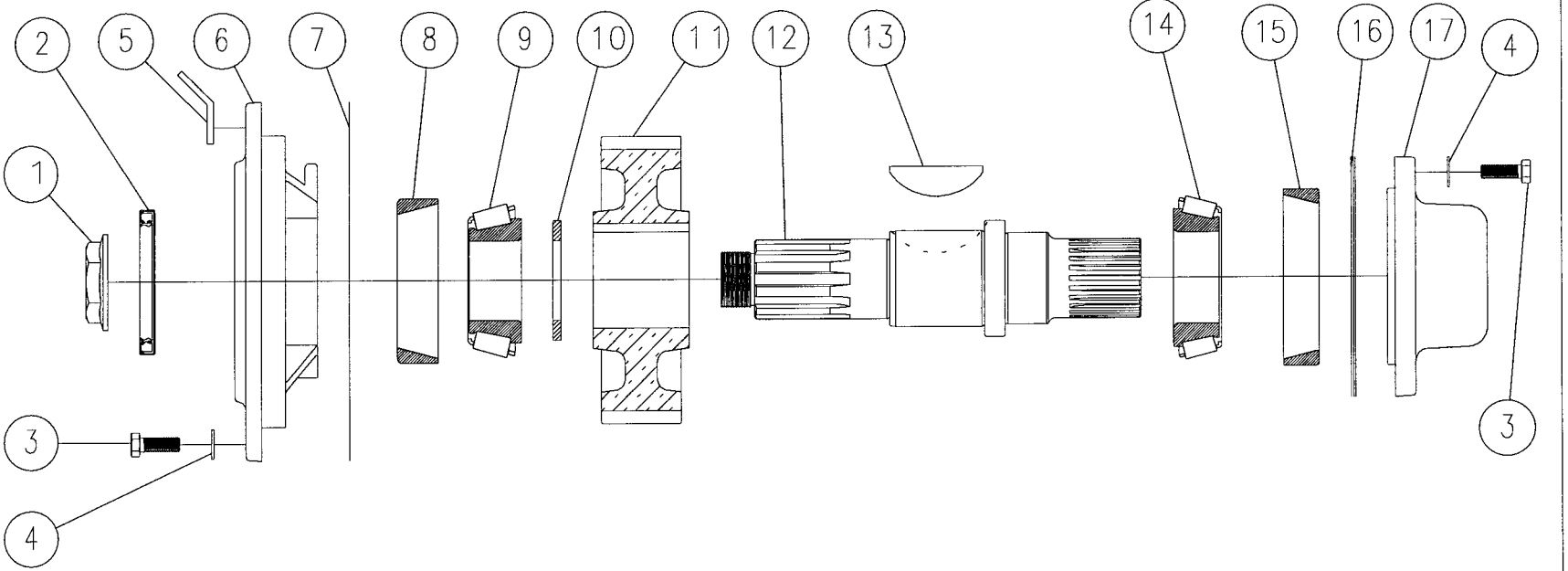

TC-270 UPPER SHAFT ASSEMBLY WITH PTO PROVISIONS

FabcoTransferCaseParts.com by Pro Gear and Transmission • 906 W. Gore St. Orlando, FL 32805 • 1 (877) 776-4600 / (407) 872-1901

TC-270 UPPER SHAFT ASSEMBLY
Models with PTO Provisions

ITEM	PART NO.	DESCRIPTION	QTY.	FOOT NOTE
1	688 738	Nut, 1 3/4-12, Lock	1	
2	732 355	Seal	1	
3	265 238	Bolt, 7/16-14 x 1 1/4 Hex Head	16	
4	927 347	Washer, 7/16 Flat	16	
5	273 687	Bracket, Lifting	2	
6	237 542 003	Carrier, Front with Lubrication Port	1	
7	427 523	Gasket	1	
8	233 492	Bearing Cup	1	
9	233 493	Bearing Cone	1	
10	927 797	Washer, Input Shaft Spacer	1	
11	432 628	Gear, Input Shaft	1	
12	776 257	Shaft, Input with PTO Provision	1	
13	966 326	Key	1	
14	233 489	Bearing Cone	1	
15	233 375	Bearing Cup	1	
16	744 278	Shim, .030 Thick, Coral	A/R	1
	744 279	Shim, .015 Thick, Pink	A/R	1
	744 282	Shim, .005 Thick, Blue	A/R	1
	744 283	Shim, .002 Thick, Red	A/R	1
17	235 655	Cap, Top Rear (PTO Provisions model)	1	

Footnotes:

1. See section 6.2 of service manual for adjustment procedures.

FabcoTransferCaseParts.com by Pro Gear and Transmission • 906 W. Gore St. Orlando, FL 32805 • 1 (877) 776-4600 / (407) 872-1901

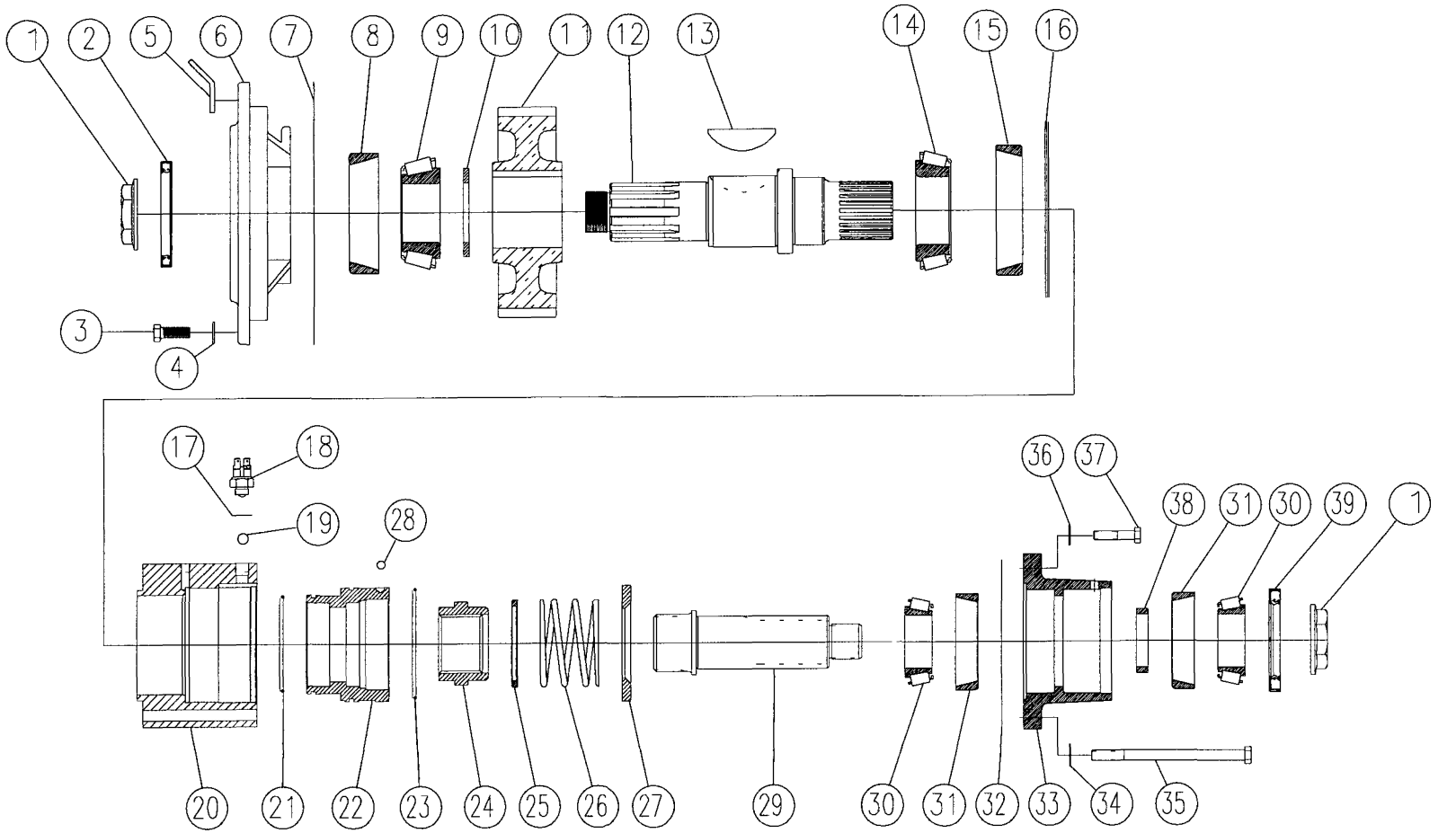

TC-270 UPPER SHAFT ASSEMBLY WITH PTO

FabcoTransferCaseParts.com by Pro Gear and Transmission • 906 W. Gore St. Orlando, FL 32805 • 1 (877) 776-4600 / (407) 872-1901

TC-270 UPPER SHAFT ASSEMBLY
Models with PTO

ITEM	PART NO.	DESCRIPTION	QTY.	FOOT NOTE
1	688 738	Nut, 1 3/4-12, Lock	2	
2	732 355	Seal	1	
3	265 238	Bolt, 7/16-14 X 1 1/4 Hex Head	8	
4	927 347	Washer, 7/16 Flat	8	
5	273 687	Bracket, Lifting	2	
6	237 542 003	Carrier, Front with Lubrication Port	1	
7	427 523	Gasket	1	
8	233 492	Bearing Cup	1	
9	233 493	Bearing Cone	1	
10	927 797	Washer, Input Shaft Spacer	1	
11	432 628	Gear, Input Shaft	1	
12	776 257	Shaft, Input with PTO Provision	1	
13	966 326	Woodruff Key	1	
14	233 489	Bearing Cone	1	
15	233 375	Bearing Cup	1	
16	744 278	Shim, .030 Thick, Coral	A/R	1
	744 279	Shim, .015 Thick, Pink	A/R	1
	744 282	Shim, .005 Thick, Blue	A/R	1
	744 283	Shim, .002 Thick, Red	A/R	1
17	927 427	Washer, Switch Spacer	1	
18	798 245	Switch, Shift Indicator	1	
19	225 286	Ball, 1/2 Diameter, Steel	1	
20	478 243	Housing, Declutch	1	
21	675 241 V14	O-Ring, 3 7/8 ID x 1/8		
22	753 247	Piston, Annular	1	
23	675 246 V14	O-Ring, 4 1/2 ID x 1/8	1	
24	432 664	Gear, Declutch	1	
25	756 254	Ring	1	
26	777 542	Spring	1	
27	756 253	Ring	1	
28	225 222	Ball, 3/8 Diameter, Steel	1	
29	776 258	Shaft	1	
30	233 536	Bearing Cone	2	
31	233 352	Bearing Cup	2	
32	728 232	Loctite, 515	3 oz.	
33	237 577	Carrier	1	
34	927 347	Washer, 7/16 SAE Flat	6	
35	283 237	Capscrew, 7/16-14 x 6, Grade 5	6	
36	927 337	Washer, 3/8 SAE Flat	2	
37	265 483	Capscrew, 3/8-16 x 1 3/4 Hex Head, Grade 5	2	
38	756 249 001	Ring, Bearing Spacer, .396 Thick		2
	756 249 002	Ring, Bearing Spacer, .402 Thick		2
	756 249 003	Ring, Bearing Spacer, .408 Thick		2
	756 249 004	Ring, Bearing Spacer, .414 Thick		2
	756 249 005	Ring, Bearing Spacer, .420 Thick		2
	756 249 006	Ring, Bearing Spacer, .426 Thick		2
	756 249 007	Ring, Bearing Spacer, .432 Thick		2
39	732 389	Seal	1	

Footnotes:

1. Select shims, item #16, to obtain .003 to .008 end float on the input shaft.
2. Select one spacer ring to give .001T to .005L end play with output yoke or sealing ring installed.

FabcoTransferCaseParts.com by Pro Gear and Transmission • 906 W. Gore St. Orlando, FL 32805 • 1 (877) 776-4600 / (407) 872-1901

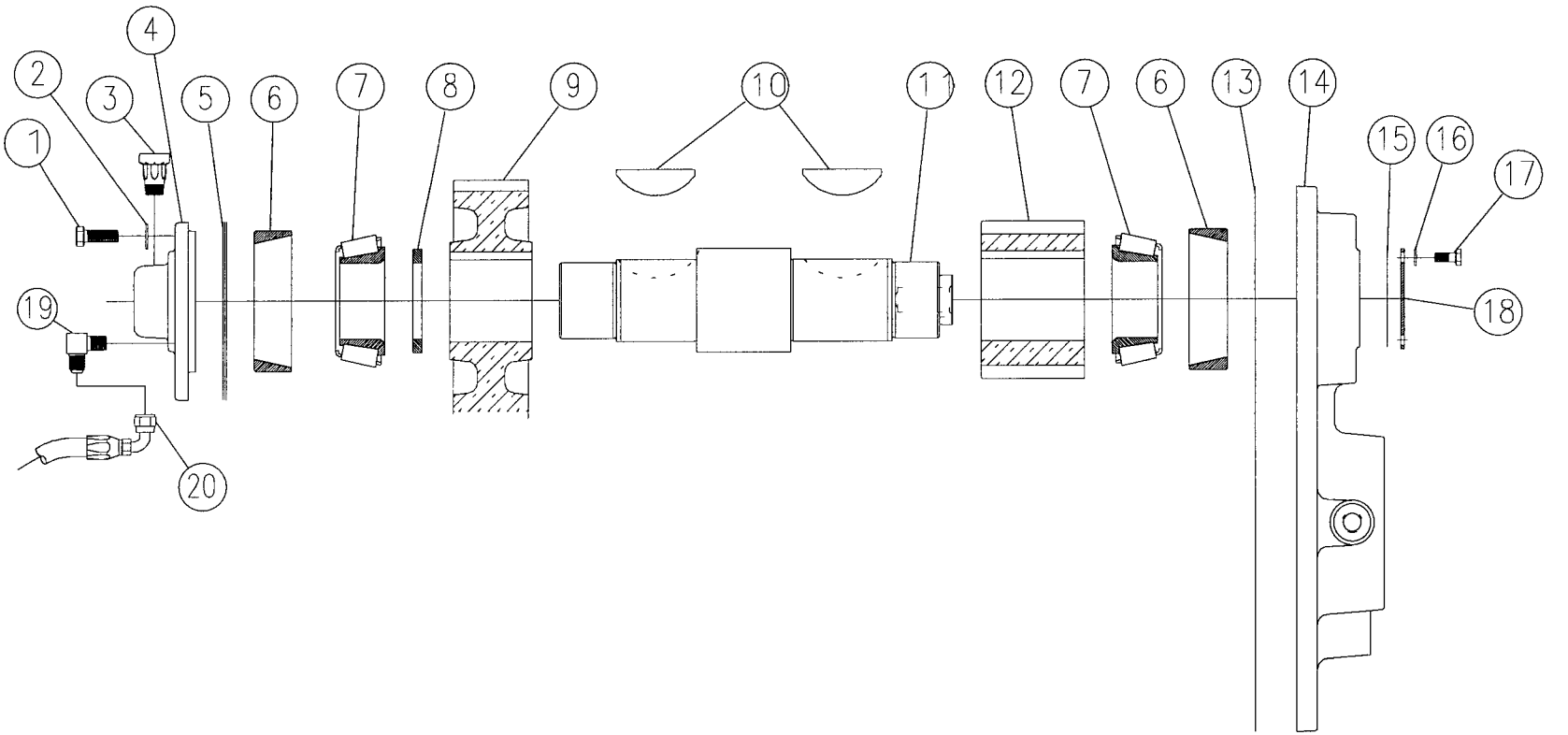

TC-270 INTERMEDIATE SHAFT ASSEMBLY WITHOUT LUBRICATION

FabcoTransferCaseParts.com by Pro Gear and Transmission • 906 W. Gore St. Orlando, FL 32805 • 1 (877) 776-4600 / (407) 872-1901

TC-270 INTERMEDIATE SHAFT ASSEMBLY
Models without Lubrication

ITEM	PART NO.	DESCRIPTION	QTY.	FOOT NOTE
1	265 238	Bolt, 7/16-14 x 1 1/4 Hex Head	6	
2	927 347	Washer, 7/16 Flat	6	
3	836 223	Breather	1	
4	235 572 003	Cap, Intermediate Front	1	
5	744 356 001	Shim, .002 Thick, Red	A/R	1
	744 356 002	Shim, .005 Thick, Blue	A/R	1
	744 356 003	Shim, .015 Thick, Pink	A/R	1
	744 356 004	Shim, .030 Thick, Coral	A/R	1
6	233 586	Bearing Cup	2	
7	233 587	Bearing Cone	2	
8	927 842	Washer, Spacer	1	
9	432 629	Gear, Intermediate Direct	1	
10	966 326	Key	2	
11	776 326	Shaft, Intermediate	1	
12	432 695	Gear, Intermediate Underdrive	1	
13	427 542	Gasket	1	
14	237 635	Carrier, Rear	1	
15	427 468	Gasket	1	
16	927 299	Washer, 5/16, Lock	6	
17	283 245	Bolt, Hex Head, 5/16-18 x 3	6	
18	235 633	Cap, Lubrication Pump Blanking	1	
19	357 898	Elbow, 90°	1	
20	469 822 050	Hose Assembly	1	

Footnotes:

1. See section 6.3 of service manual for adjustment procedure.

FabcoTransferCaseParts.com by Pro Gear and Transmission • 906 W. Gore St. Orlando, FL 32805 • 1 (877) 776-4600 / (407) 872-1901

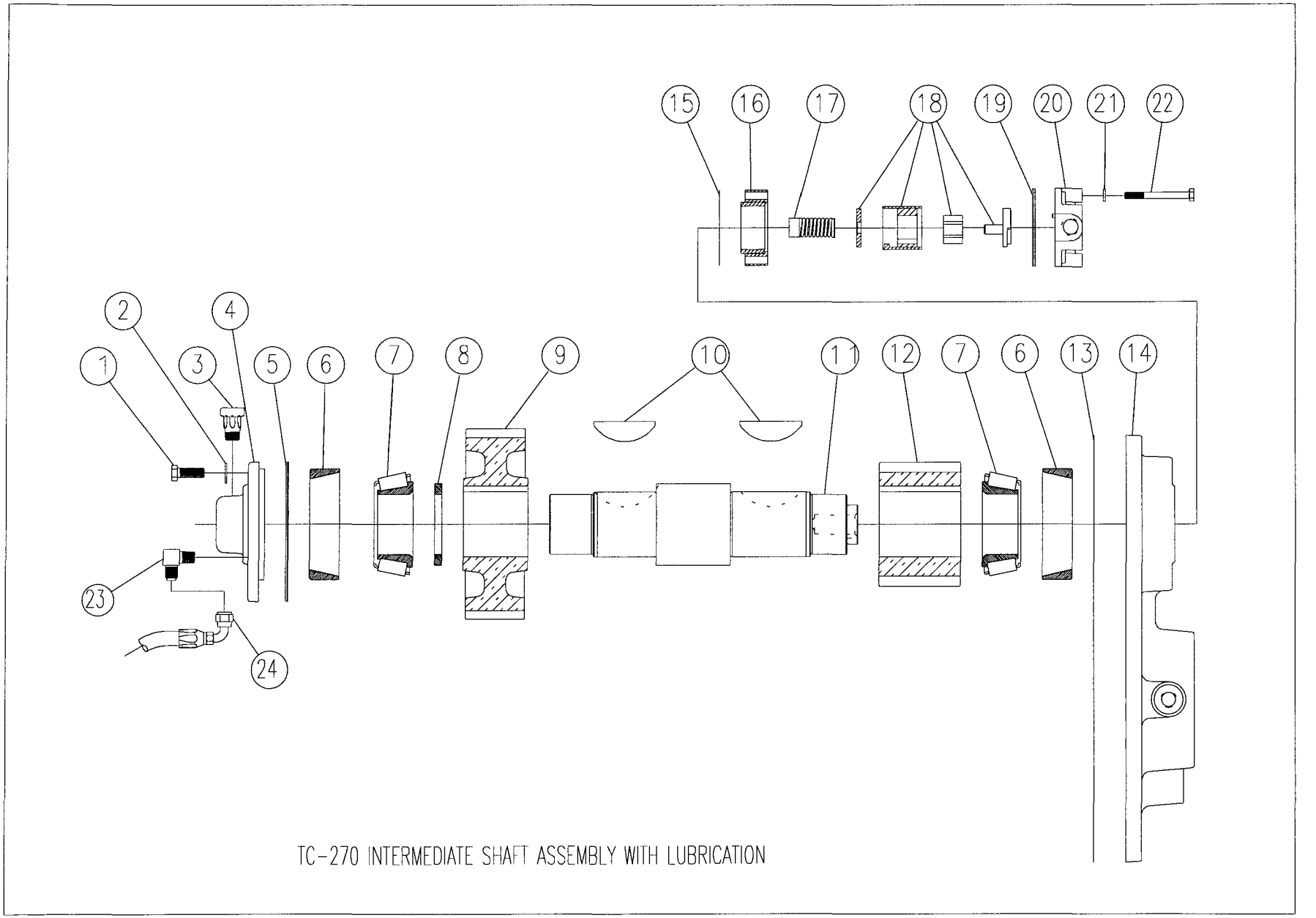

FabcoTransferCaseParts.com by Pro Gear and Transmission • 906 W. Gore St. Orlando, FL 32805 • 1 (877) 776-4600 / (407) 872-1901

TC-270 INTERMEDIATE SHAFT ASSEMBLY
Models with Lubrication

ITEM	PART NO.	DESCRIPTION	QTY.	FOOT NOTE
1	265 238	Bolt, 7/16-14 x 1 1/4 Hex Head	6	
2	927 347	Washer, 7/16 Flat	6	
3	836 223	Breather	1	
4	235 572 003	Cap, Intermediate Front	1	
5	744 356 001	Shim, .002 Thick, Red	A/R	1
	744 356 002	Shim, .005 Thick, Blue	A/R	1
	744 356 003	Shim, .015 Thick, Pink	A/R	1
	744 356 004	Shim, .030 Thick, Coral	A/R	1
6	233 586	Bearing Cup	2	
7	233 587	Bearing Cone	2	
8	927 842	Washer, Spacer	1	
9	432 629	Gear, Intermediate Direct	1	
10	966 326	Key	2	
11	776 326	Shaft, Intermediate	1	
12	432 695	Gear, Intermediate Underdrive	1	
13	427 542	Gasket	1	
14	237 635	Carrier, Rear	1	
15	427 468	Gasket	1	
16	7561324	Spacer Ring & Bearing Assembly	1	
17	777 536	Spring, Lubrication Pump, Pressure	1	
18	786 296	Lubrication Pump Cartridge Assembly	1	
19	744 324	Shim, Lubrication Pump	A/R	2
20	235 492	Cap, Lubrication Pump	1	
21	927 299	Washer, 5/16 Lock	6	
22	283 245	Bolt, Hex Head, 5/16-18 x 3	6	
23	357 898	Elbow, 90°	1	
24	469 822 050	Hose Assembly	1	

Footnotes:

1. See section 6.3 of service manual for adjustment procedures.
2. See section 6.7 of service manual for adjustment procedures.

FabcoTransferCaseParts.com by Pro Gear and Transmission • 906 W. Gore St. Orlando, FL 32805 • 1 (877) 776-4600 / (407) 872-1901

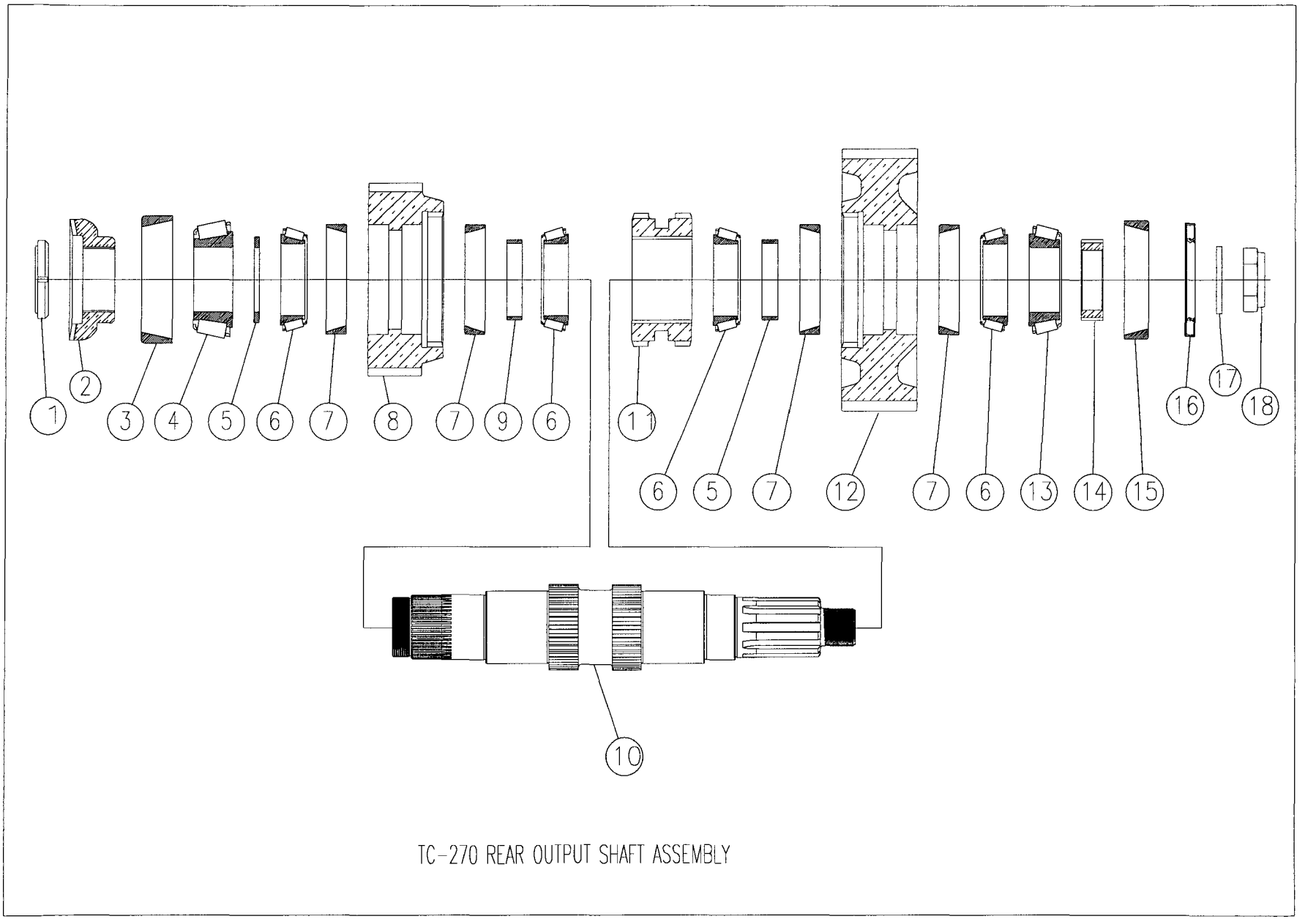

TC-270 REAR OUTPUT SHAFT ASSEMBLY

FabcoTransferCaseParts.com by Pro Gear and Transmission • 906 W. Gore St. Orlando, FL 32805 • 1 (877) 776-4600 / (407) 872-1901

TC-270 REAR OUTPUT SHAFT ASSEMBLY

ITEM	PART NO.	DESCRIPTION	QTY.	FOOT NOTE
1	688 744	Nut, 2.751-18, Bearing Lock	1	
2	432 688	Gear, Front Declutch Fixed	1	
3	233 554	Bearing Cup	1	
4	233 556	Bearing Cone	1	
5	927 843	Washer	1	
6	233 528	Bearing Cone	4	
7	233 527	Bearing Cup	4	
8	432 659	Gear, Lower Direct Drive	1	
9	756 237 001	Ring, Bearing Spacer, .719 Thick		1
	756 237 002	Ring, Bearing Spacer, .716 Thick		1
	756 237 003	Ring, Bearing Spacer, .713 Thick		1
	756 237 004	Ring, Bearing Spacer, .710 Thick		1
10	776 327	Shaft, Rear Output	1	
11	432 656	Gear, Clutch Collar	1	
12	432 658	Gear, Lower, Overdrive	1	
13	233 497	Bearing Cone	1	
14	432 696	Gear, Electronic Speedo Sensor	1	
15	233 375	Bearing Cup	1	
16	732 428	Seal, Rear Output	1	
17	927 775 006	Washer, Output Shift	1	
18	688 642	Nut, 1 3/4-16 Lock	1	

Footnotes:

1. Select one spacer ring. See section 6.4 of service manual for adjustment procedures.

FabcoTransferCaseParts.com by Pro Gear and Transmission • 906 W. Gore St. Orlando, FL 32805 • 1 (877) 776-4600 / (407) 872-1901

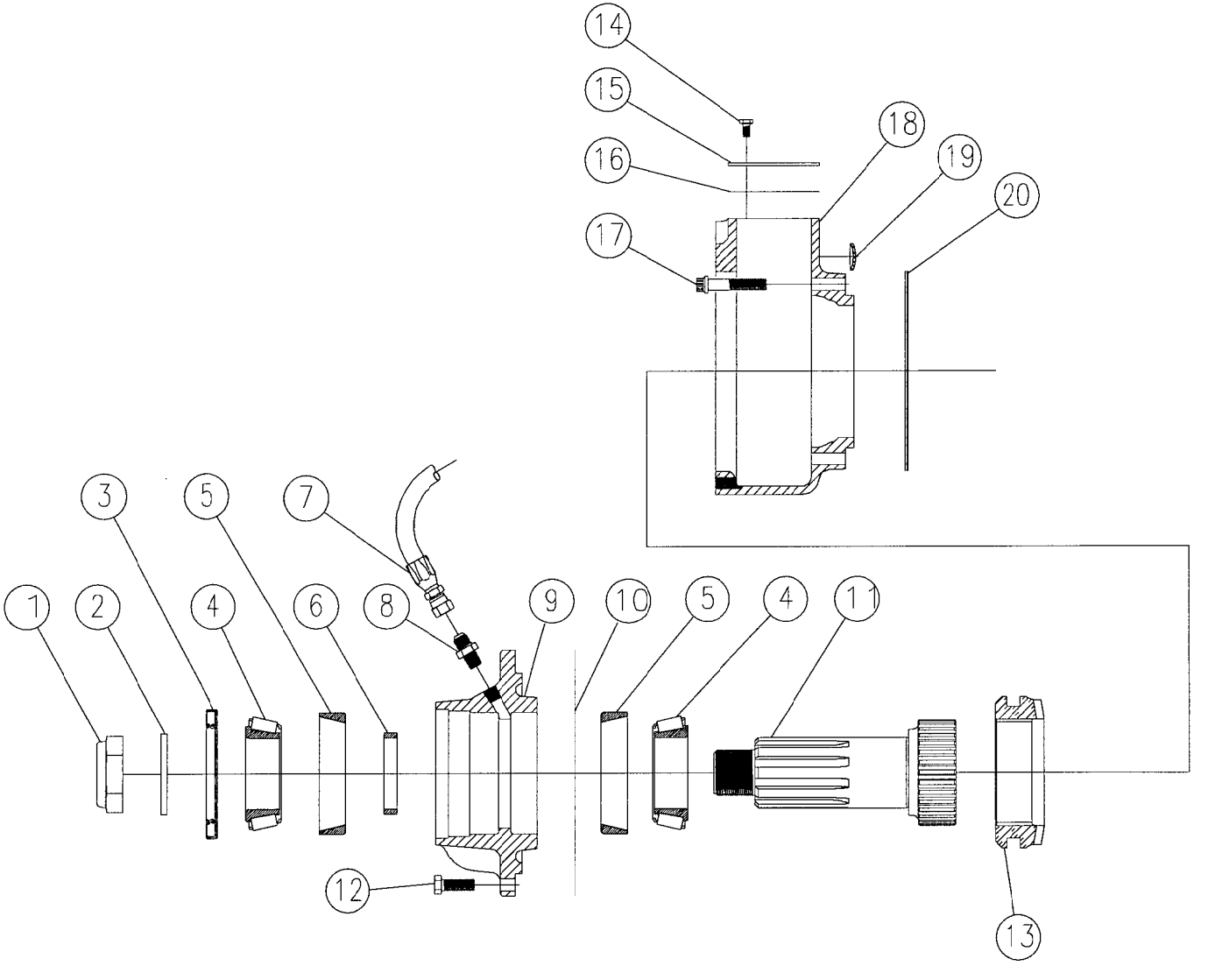

TC-270 FRONT OUTPUT SHAFT ASSEMBLY

FabcoTransferCaseParts.com by Pro Gear and Transmission • 906 W. Gore St. Orlando, FL 32805 • 1 (877) 776-4600 / (407) 872-1901

TC-270 FRONT OUTPUT SHAFT ASSEMBLY
Models with Declutch

ITEM	PART NO.	DESCRIPTION	QTY.	FOOT NOTE
1	688 642	Locknut, 1 3/4-16, Lock	1	
2	927 775 006	Washer, Output	1	
3	732 333	Seal	1	
4	233 572	Bearing Cone	2	
5	233 569	Bearing Cup	2	
6	765 287 001	Ring, Bearing Spacer, .540 Thick		1
	765 287 002	Ring, Bearing Spacer, .545 Thick		1
	765 287 003	Ring, Bearing Spacer, .550 Thick		1
	765 287 004	Ring, Bearing Spacer, .555 Thick		1
7	469 882 050	Hose Assembly	1	
8	357 287	Adapter	1	
9	237 622 002	Carrier, Front Output	1	
10	427 375	Gasket	1	
11	776 287	Shaft, Front Output	1	
12	265 238	Bolt, 7/16-14 x 1 1/4 Hex Head	8	
13	432 689	Gear, Front Declutch Sliding	1	
14	265 343	Bolt, 1/4-20 x 1/2 Hex Head	4	
15	792 866	Plate	1	
16	427 376	Gasket	1	
17	724 677	Screw, 7/16-14 x 2 1/4, 12 Pt.	6	
18	478 267	Housing, Declutch	1	
19	788 328	Plug, 1” Welch	1	
20	744 357 001	Shim, .002 Thick, Red	A/R	2
	744 357 002	Shim, .005 Thick, Blue	A/R	2
	744 357 003	Shim, .015 Thick, Pink	A/R	2
	744 357 004	Shim, .030 Thick, Coral	A/R	2

Footnotes:

1. Select one spacer ring. See Section 6.5 of Service Manual for adjustment procedures.
2. See Section 6.5 of Service Manual for adjustment procedures.

FabcoTransferCaseParts.com by Pro Gear and Transmission • 906 W. Gore St. Orlando, FL 32805 • 1 (877) 776-4600 / (407) 872-1901

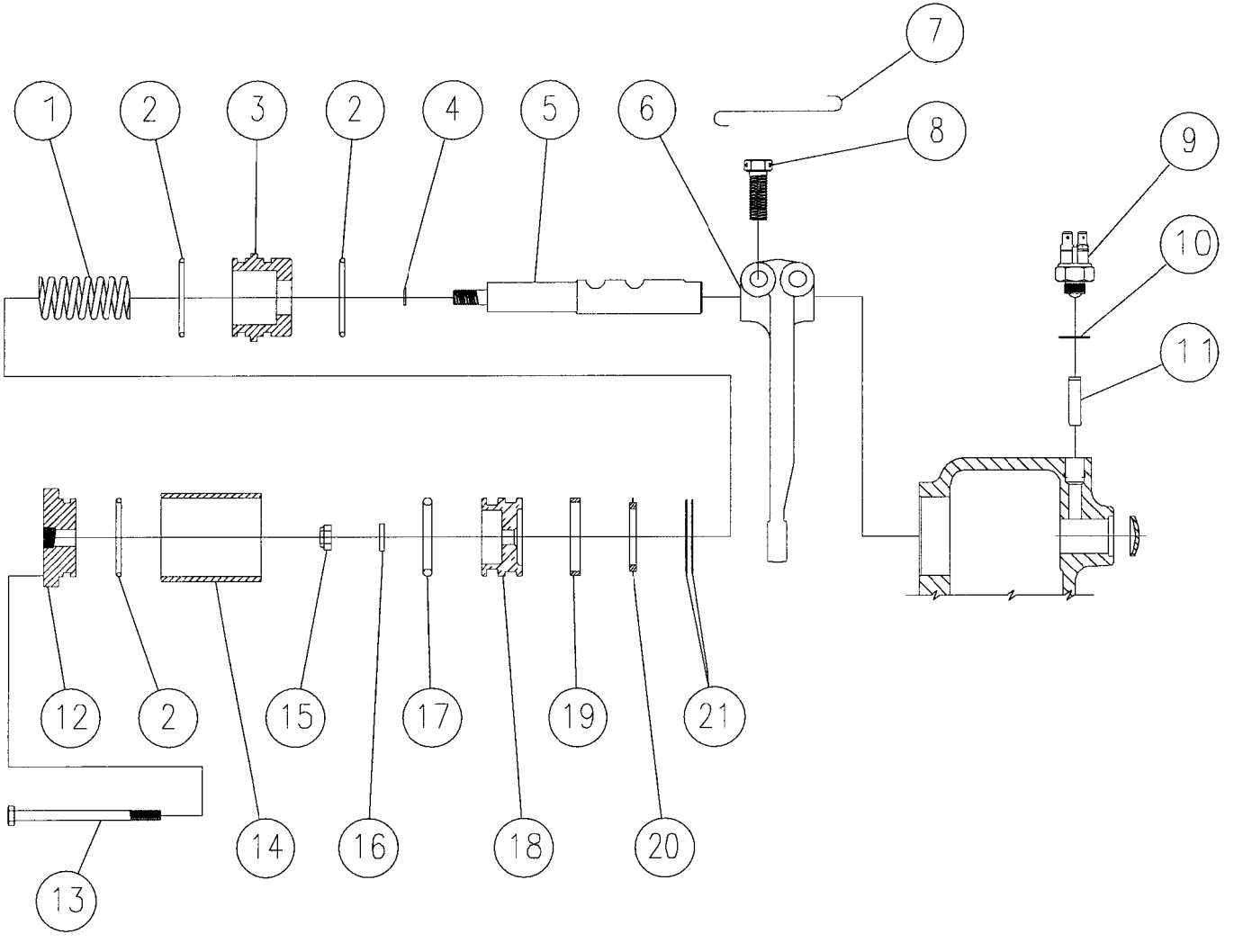

TC-270 FRONT DECLUTCH AIR SHIFT ASSEMBLY

FabcoTransferCaseParts.com by Pro Gear and Transmission • 906 W. Gore St. Orlando, FL 32805 • 1 (877) 776-4600 / (407) 872-1901

TC-270 FRONT DECLUTCH AIR SHIFT ASSEMBLY

ITEM	PART NO.	DESCRIPTION	QTY.	FOOT NOTE
1	777 477	Spring, Front Drive Shift	1	
2	675 224	O-Ring, Piston	3	
3	883 482	Tube, Front Drive Shift Cylinder Adapter	1	
4	782 288	O-Ring	1	
5	776 296	Shaft, Front Drive Shift	1	
6	367 254	Fork, Front Declutch Shift	1	
7	947 223	Lockwire	1	
8	265 768	Bolt, 7/16-20 x 1 3/8, Drilled, Grade 8	2	
9	798 245	Switch, Shift Indicator	1	
10	927 427	Washer, Copper	1	
11	746 628	Pin, 5/16 Diameter	1	
12	235 352	Cap, Front Drive Shift Cylinder	1	
13	265 769	Bolt, 1/4-20 x 3 3/4 Hex Head	4	
14	883 887 017	Tube, Front Drive Shift Cylinder	1	
15	688 464	Nut, 3/8-24 Lock	1	
16	927 643	Washer	1	
17	675 326	O-Ring	1	
18	753 232	Piston, Front Drive Shift	1	
19	339 223	Felt Wiper	1	
20	736 747	Ring, Piston Stop	1	
21	927 822	Washer, Front Drive Shift Cylinder Adapter	A/R	1

Footnotes:

1. See Section 6.6 of service manual for adjustment procedures.

FabcoTransferCaseParts.com by Pro Gear and Transmission • 906 W. Gore St. Orlando, FL 32805 • 1 (877) 776-4600 / (407) 872-1901

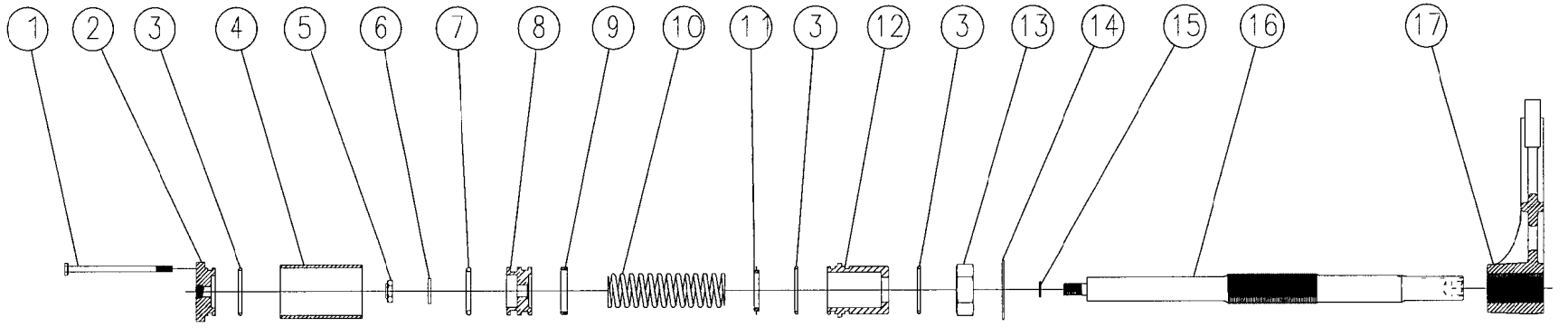

TC 270 SHIFT CYLINDER ASSEMBLY WITHOUT NEUTRAL

FabcoTransferCaseParts.com by Pro Gear and Transmission • 906 W. Gore St. Orlando, FL 32805 • 1 (877) 776-4600 / (407) 872-1901

TC-270 SHIFT CYLINDER ASSEMBLY
Models without Neutral

ITEM	PART NO.	DESCRIPTION	QTY.
1	265 772	Bolt, 1/4-20 x 4 1/2 Hex Head	4
2	235 528	Cap, H-L Shift Cylinder	1
3	675 224	O-Ring	3
4	883 887 005	Tube, H-L Shift Cylinder	1
5	688 725	Nut, 1/2-13, Lock	1
6	927 553	Washer, H-L Shift Shaft	1
7	675 326	O-Ring, Piston	1
8	753 245	Piston, H-L Shift	1
9	339 223	Felt Wiper	1
10	777 486	Spring, H-L Shift	1
11	736 747	Ring, Piston Stop	1
12	883 683	Tube, H-L Shift Cylinder Adapter	1
13	688 245	Nut, 1 1/4-12, Jam	1
14	793 464	Plate, Shift Fort Nut, Locking	1
15	675 014	O-Ring	1
16	776 328	Shaft, H-L Shift	1
17	367 288	Fork, H-L Shift	1

FabcoTransferCaseParts.com by Pro Gear and Transmission • 906 W. Gore St. Orlando, FL 32805 • 1 (877) 776-4600 / (407) 872-1901

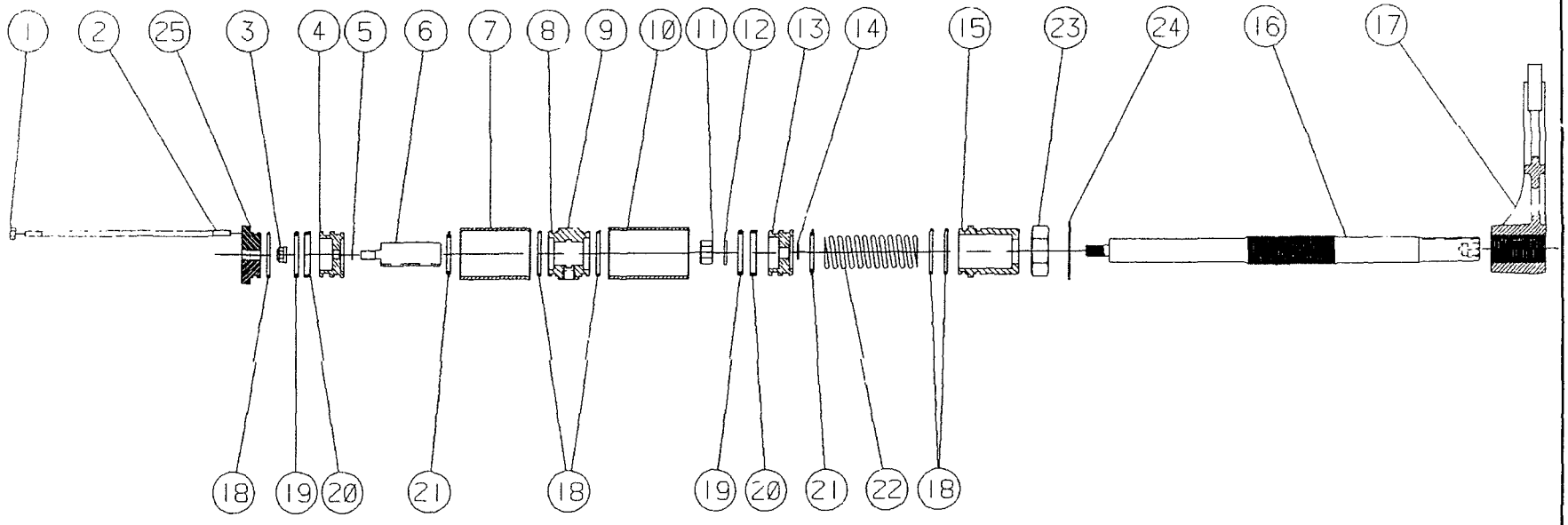

TC-270 SHIFT CYLINDER ASSEMBLY WITH NEUTRAL

FabcoTransferCaseParts.com by Pro Gear and Transmission • 906 W. Gore St. Orlando, FL 32805 • 1 (877) 776-4600 / (407) 872-1901

TC-270 SHIFT CYLINDER ASSEMBLY
Models with Neutral

ITEM	PART NO.	DESCRIPTION	QTY.
1	688 395	Nut, 1/4-20, Hex	1
2	788 546 002	Stud, 1/4-20 x 9”	4
3	688 464	Nut, 3/8-24, Flexlock	1
4	753 232	Piston, Neutral Shift	1
5	782 288	O-Ring	1
6	769 389	Shaft, Neutral Shift	1
7	883 887 006	Tube, Neutral Shift	1
8	927 643	Washer	1
9	883 893	Tube, Neutral Shift Adapter	1
10	883 887 005	Tube, H-L Shift Cylinder	1
11	688 726	Nut. 1/2-13, Lock	1
12	927 553	Washer	1
13	753 245	Piston, H-t Shift	1
14	675 014	O-Ring	1
15	883 683	Tube, H-L Shift Cylinder Adapter	1
16	776 328	Shaft, H-L Shift	1
17	367 288	Fork, Shift	1
18	675 324	O-Ring, Adapters & Caps	5
19	675 326	O-Ring	2
20	339 223	Felt Wiper	2
21	736 747	Ring, Piston Stop	2
22	777 486	Spring, H-L Shift	1
23	688 245	Nut, 1 1/4-12 Jam	1
24	793 464	Plate, Shift Fork Nut, Locking	1
25	235 352	Cap, Shift Cylinder	1

FabcoTransferCaseParts.com by Pro Gear and Transmission • 906 W. Gore St. Orlando, FL 32805 • 1 (877) 776-4600 / (407) 872-1901

TC-270 PARTS NOT ILLUSTRATED

ITEM	PART NO.	DESCRIPTION	QTY.	FOOT NOTE
1	273 764	Filter Mounting Bracket	1	1
2	345 267	Filter, Oil	1	1
3	345 268	Strainer, Oil	1	1
4	478 288	Housing, Transfer Case Main	1	
5	737 551 001	Lubrication Piping Kit For assembly no. 873 044 003 and 873 044 006 (basic case with no provisions for field installation of PTO).		
	737 551 002	Lubrication Piping Kit For assembly no. 873 044 004 (model with PTO).		
	737 551 004	Lubrication Piping Kit For assembly no. 873 044 007 (basic case with provisions for field installation of PTO).		
6	758 232	Plug, 1/4 NPT		
7	758 274	Plug, 3/4 NPT Magnetic, Oil Drive		
8	758 352	Plug, 3/4 NPT Oil Fill		

Footnotes:

1. Part is included in lubrication piping kit.

FabcoTransferCaseParts.com by Pro Gear and Transmission • 906 W. Gore St. Orlando, FL 32805 • 1 (877) 776-4600 / (407) 872-1901